Monmouth Scientific

Operating & Maintenance Manual

Circulaire®

Compact Filtered Storage

CFS400

THE MARKET LEADER IN *CLEAN AIR SOLUTIONS*

www.monmouthscientific.co.uk

CONTENTS

For permission requests, please write to: -
Monmouth Scientific Limited,
Monmouth House, Peninsula Business Park, Bristol Road, Bridgwater, Somerset, TA6 4QB.
Email: info@monmouthscientific.co.uk
Tel: +44(0)1278 458090

INTRODUCTION

The Monmouth CFS400 Compact Filtered Storage Cabinet has been designed for the safe storage and segregation of hazardous substances as required by the COSHH Regulations. The cabinet is constructed from epoxy coated heavy gauge ‘zintec’ steel that provides extra strength and rigidity to withstand both laboratory and industrial environments.

The cabinet has a compact footprint and low height permitting it to be located either wall mounted or freestanding on the bench top.

The standard cabinet has an integral polypropylene removable spillage tray. An optional stainless steel spillage tray is available on request.

Access to the chemical storage area is via a clear acrylic hinged door located on the front of the cabinet.

The cabinet is continuously ventilated to prevent the build up of fumes in the storage area and therefore prevent exposure of operators to chemical inhalation. There is a two-stage active filtration system located in the top of the cabinet. The contaminated air is passed through an electro-statically charged pre-filter to remove particulate, then through an activated carbon main filter to remove chemical contaminates. The clean air is re-circulated back to the laboratory.

TECHNICAL DATA

MODEL NO.		CFS400
TOTAL AIRFLOW (M^3/HR)		11
INTERNAL VOLUME (M^3)		0.025
VOLUME AIR CHANGES/HR		480
VOLTAGE/FREQUENCY		230V 50Hz
POWER CONSUMPTION		50 WATTS MAX.
SOUND LEVEL (ISO6081)		<55 dB(A)
FILTER		FILTRETE PARTICULATE PRE-FILTER. CARBON (GRADE TO SUIT APPLICATION)
AIRFLOW MONITORING		FRONT PANEL MOUNTED VISUAL INDICATOR
SECURITY		KEY LOCKED DOOR
DIMENSIONS EXTERNAL (H X W X D)		435 X 400 X 240MM
WEIGHT (NET)		9KG
MATERIALS	CABINET	POLYESTER POWDER-COATED ZINTEC STEEL
	DOOR	CLEAR ACRYLIC
	SPILLAGE TRAY	POLYPROPYLENE / STAINLESS STEEL* *OPTIONAL

INSTALLATION

The Chemical Storage Cabinet requires a 13A electrical supply and is supplied with an IEC socket fitted with a 3A fuse.

The cabinet is a “pug and play” unit and comes configured for operation without additional commissioning.
It should be placed in a draught free location.
4 x fixing holes are provided in the rear of the enclosure for wall mounting. Care should be taken to ensure the wall and fixings are adequate to support the total weight of both cabinet and stored substances.
For freestanding applications, ensure the cabinet is mounted on a stable and flat surface.

OPERATION

The cabinet is designed for continuous operation and when unattended, the cabinet can be left running continuously to always ensure containment of fumes.

Switch the cabinet on with the green rocker switch on the front panel.
An airflow indicator is located on the front door. When in the green zone, sufficient airflow is indicated and the cabinet is functioning with satisfactorily. If the indicator drops into the red zone, this means airflow is reduced to the point that extraction and containment performance is likely reduced. Most likely causes are the unit is turned off or the pre-filter is blocked and should be changed.

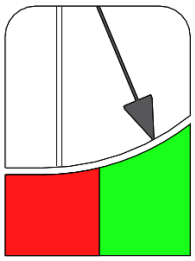

MAINTENANCE

CHANGING FILTERS

Filters concentrate dust; pollutants etc. and care must be taken when changing them.

IMPORTANT: Personal Protective Equipment must be worn when changing filters including gloves and particulate facemask. All used filters are likely to be contaminated and should be bagged for disposal in accordance with local safety procedures

1. Turn the cabinet off and unplug from the electrical supply.
2. Using a suitable screwdriver/Allen key, remove the 8 screws securing the top cover in place, then remove top panel.
3. Unplug the fan.
4. Using a suitable screwdriver/Allen key, remove the 4 screws securing the carbon clamp in place, then remove carbon clamp.
5. The carbon main filter can now be seen. Lift out old carbon from the cabinet and bag for disposal in accordance with local safety procedures.
6. The pre-filter can now be seen Lift out the old pre-filter and and bag for disposal in accordance with local safety procedures. Replace the filter.
7. Replace the carbon filter.
8. Refit carbon clamp.
9. Reconnect the fan.
10. Refit top cover and securing screws.
11. Turn the cabinet on and check the flow monitor is within the green zone.
12. The cabinet is now ready for use.

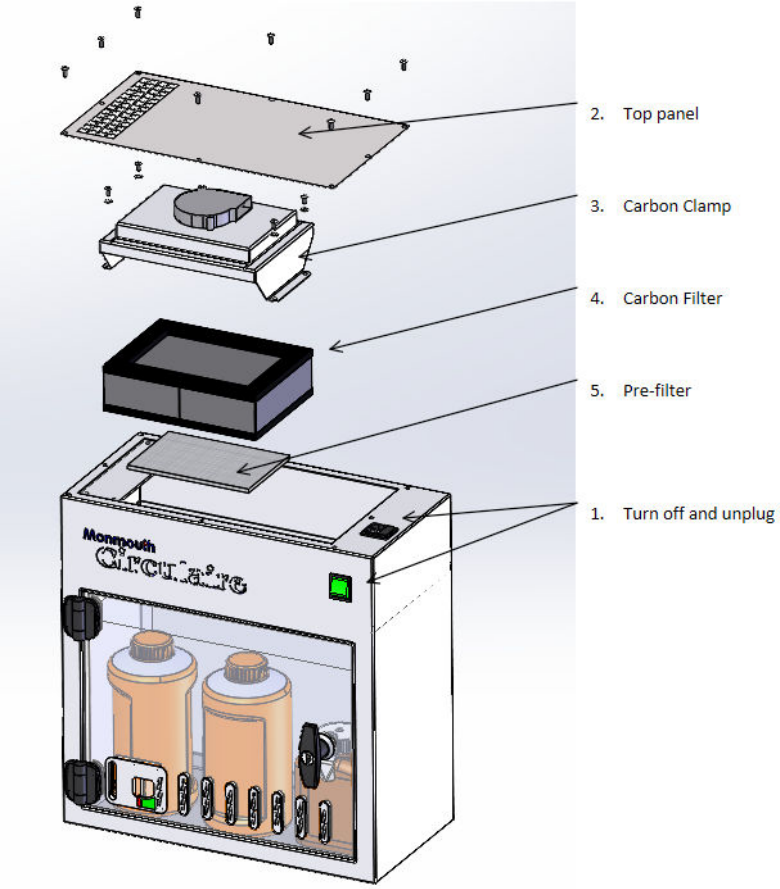
2. Top panel
3. Carbon Clamp
4. Carbon Filter
5. Pre-filter
1. Turn off and unplug
Monmouth

FILTER SELECTION

It is most important that filters fitted are correct for the particular application.

Activated Carbon Filters
Standard activated carbon is suitable for a wide range of pollutants including hydrocarbons. Activated carbon can be impregnated with chemicals to neutralise other types of chemicals. The list below indicates the types available.

Filter Type	Application	Typical Chemicals
AC (activated carbon)	Hydrocarbons	Alcohols, Hydrocarbons, General use
ACID	Acid gasses	So_2, HCL, H_2So_4
FORM	Aldehydes	Formalin Glutaraldehyde
SUL	Sulphur compounds	H_2S, mercaptans
AMM	Ammonia	NH_3, NH_4
ETHER	Ethers	
SCHOOLS	Educational, Animal odours	SO_2, H_2SO_4, BR_2, H_2S, NH_3, CCL_4, hydrocarbons

- All grades of activated carbon have general use capability for hydrocarbons.
- Other grades are available for applications not listed above.

To determine correct filter type please contact Monmouth Scientific with details of application.

MAXIMISING FILTER LIFE

Storage vessels should have ‘sealed’ lids.
Acids should be at room temperature and in ‘sealed’ containers

REPLACEMENT FILTER PART NUMBERS

Replacement filters are available from Monmouth Scientific:
Please note the CFS400 is fitted with one main carbon and one pre-filter.

Pre-Filters	Part No-	K-PF0180
AC Carbon Filter	Part No-	available on request
ACID Carbon Filter	Part No-	available on request
AMM Carbon Filter	Part No-	available on request
FORM Carbon Filter	Part No-	K-CF0527
ETHER Carbon Filter	Part No-	available on request
SCHOOL Carbon Filter	Part No-	available on request
SUL Carbon Filter	Part No-	available on request

SERVICING

An annual service is recommended to maintain optimum operating conditions and will include the following points:

- Check / replace pre-filter
- Check condition / replace main carbon filter
- Check general condition of system.
- Issue test report and certificate.

For parts or service information please contact
Monmouth Scientific on: +44 (0) 1278 458090

Monmouth Scientific

Monmouth Scientific Limited
UK Headquarters
Monmouth House,
Peninsula Business Park,
Bridgwater,
Somerset,
TA6 4QB.
+44(0)1278 458090

www.monmouthscientific.co.uk
info@monmouthscientific.co.uk

5 year warranty* *Terms & Conditions Apply

British Design & Manufacture

nqa ISO 9001 QUALITY MANAGEMENT

UKAS MANAGEMENT SYSTEMS 015